J Wood Sci (2003) 49:479–484
DOI 10.1007/s10086-003-0515-0

ORIGINAL ARTICLE

Katsufusa Naruse

Estimation of shear moduli of wood by quasi-simple shear tests

Received: December 13, 2001 / Accepted: January 6, 2003

Abstract A quasi-simple shear test, which is the most direct method for examining the shear properties of sheet metals, has been applied to measure the shear moduli of wood. Buna (*Fagus crenata* Blume) with variously sized shear regions was used for the test specimens. Strain gauges were mounted in the center of the shear regions to measure the shear strains. The shear tests were carried out to determine the shear moduli in the radial and tangential planes. Apparent shear moduli obtained from the experimental results were corrected by finite element method (FEM) simulation of the shear region, where both shearing and bending are produced. It was found that the corrected shear moduli are roughly independent of test conditions, and their values are in good agreement with the data obtained from bending-shear tests. This suggests that the method employed here can effectively estimate the shear moduli of wood.

Key words Shear modulus · Quasi-simple shear test · Apparent shear modulus · Stress analysis

Introduction

The torsion test and off-axis tension or compression test are commonly used to measure the shear modulus of wood,[1] although in some cases the static bending test or flexural vibration test is utilized instead.[2,3] Research on application of the Iosipescu shear test to this measurement was also reported.[4] Having different features, these conventional tests are used depending on the requirements for accuracy and simplicity of the experiment.

K. Naruse
Department of Control and Information Systems, Tsuruoka National College of Technology, 104 Inooka, Tsuruoka 997-8511, Japan
Tel. +81-235-25-9058; Fax +81-235-24-1840
e-mail: katsu@tsuruoka-nct.ac.jp

Part of this research was presented at the 50th Annual Meeting of the Society of Materials Science, Osaka, May 2001

In this paper, the feasibility of a simple shear test as an alternative method for evaluating the shear modulus of wood is discussed from the aspects of both experimental and finite element method (FEM) simulation. Although the simple shear test is basically the most direct method for investigating the shear properties of materials, it is difficult to obtain the shear modulus of wood by this method. This is because we cannot measure exactly the small deformations in the shear regions of the test specimen without accurate equipment. To overcome the experimental difficulty, strain gauges were used here. In general, shearing and bending, which is a minor deformation, take place simultaneously in the shear regions. The more the shear regions are governed by shear, the more fully are the simple shear deformations attained. The possibility of simple shear depends on the dimensions of the shear zones. Taking this point into account, we propose a simplified procedure to obtain the proper shear modulus value.

Experiment

Specimens

Buna (*Fagus crenata* Blume) was used for the specimens. The density and moisture content of the specimens were in the range of 0.71–0.76 g/cm^3 and 6.9%–8.7%, respectively.

Quasi-simple shear tests

The simple shear test was originally developed for sheet metals.[5] The features of this test as shown in Fig. 1 are that shear zones are disposed symmetrically to produce a stable deformation and that only simple shear is expected to occur in the shear zones with the strong restraint as the specimen dimension c becomes sufficiently small.

The test specimen used here is shown in Fig. 2. As illustrated in Fig. 3, the specimen, having a thickness of 5 mm, was fixed tightly to the shearing test jigs with eight bolts to generate the shear deformations within the shear zones,

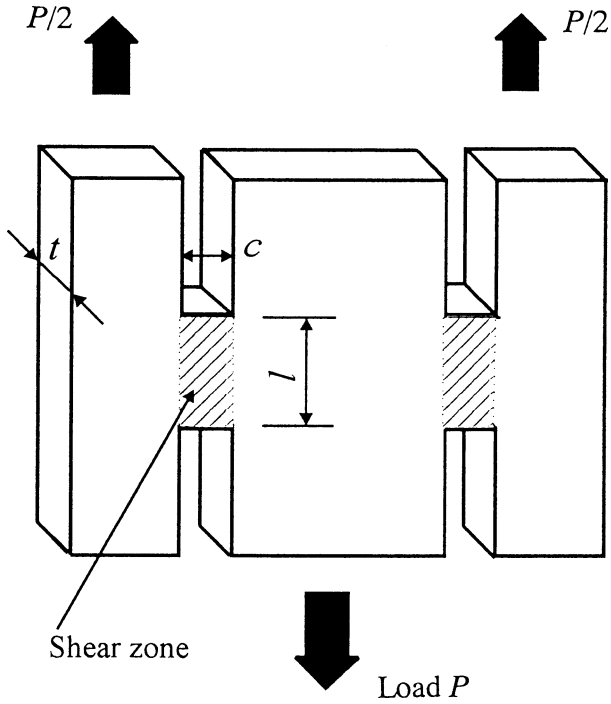

Fig. 1. Simple shear test. *t*, thickness; *c*, shear zone size

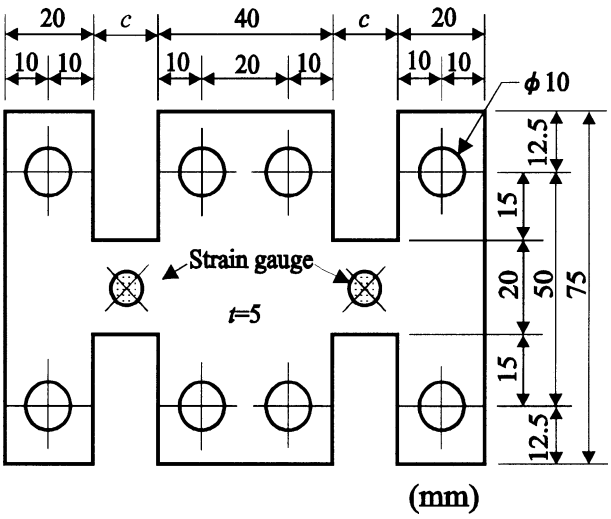

Fig. 2. Geometry of test specimen with thickness *t* of 5 mm (c = 10, 15 mm)

where *c* is 10 and 15 mm. In this case, because the coexisting bending cannot be ignored, we defined this test as the quasi-simple shear test. To measure the shear strains in the center of the shear zones, biaxial strain gauges (gauge length 2 mm, base circle diameter 7 mm) (Tokyo Sokki) were bonded on the specimen's surface. The corners of the shear zones were rounded to a radius of 1 mm to avoid the stress concentrations.

We measured the shear moduli in the longitudinal-radial (LR) and longitudinal-tangential (LT) planes. Two specimens were prepared for each measurement: One test specimen was loaded in a direction parallel to the longitudinal direction (LR specimen), and a second one was loaded

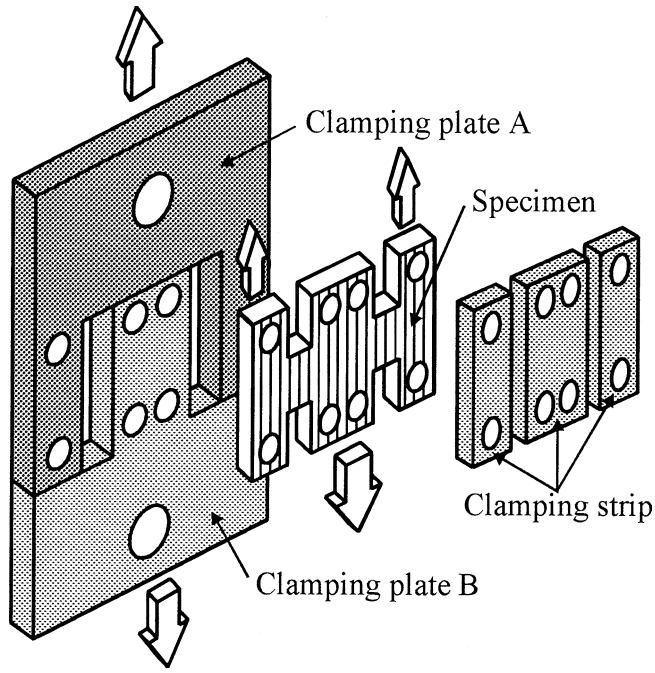

Fig. 3. Quasi-simple shear test

perpendicular to the longitudinal direction (RL specimen). Great care was taken during specimen preparation to achieve a radial or tangential plane as precisely as possible, particularly in the LT specimens. The tests were performed by applying the shearing load in a computer-controlled testing machine (Shimadzu AG-10TA) at a constant crosshead speed of 0.05 mm/min. The measured values of load and strains were then sent to a personal computer via a data logger (NEC San-ei D5100). Five specimens were used for each test condition.

Bending-shear tests

Four-point bending tests were also carried out for comparison purposes. The testing method is shown in Fig. 4. Beam specimens with the dimensions of 25 mm (radial direction) × 25 mm (tangential direction) × 480 mm (longitudinal direction) were prepared from the same lumber. To measure the shear strains in the middle between the loading point and support, biaxial strain gauges, which are the same as those used in the shear tests, were bonded on the specimen. Loading heads with a radius of 30 mm were used. The speed of loading was 1 mm/min. Five specimens were used for each test condition.

FEM simulation of quasi-simple shear

Quasi-simple shear tests were simulated by a three-dimensional FEM program[6] modified for orthotropic materials. Figure 5 shows the FEM model for the LR or RL specimens with *c* at 10 mm, where the *z*-axis is taken in the loading direction. The models were divided into the finite elements having the dimensions of 5 × 1 × 1 mm. The

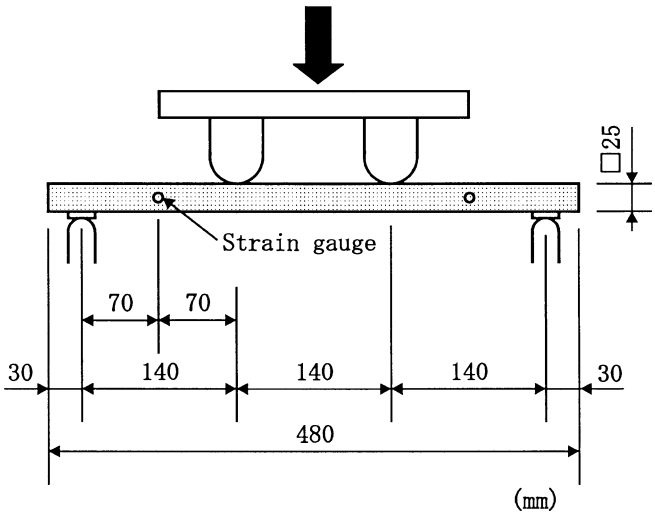

Fig. 4. Four-point bending test

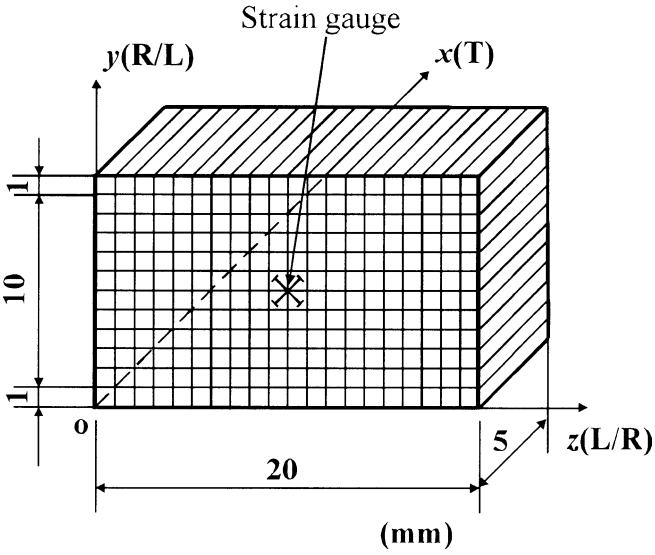

Fig. 5. Coordinate system and finite element mesh for shear zone of LR/RL specimen. *L*, *R*, *T*, longitudinal, radial, and tangential directions, respectively

lowermost elements lying outside the shear zone in the *y*-axis were fixed, whereas the uppermost ones were given a prescribed displacement λ along the *z*-axis. The elastic constants used for RL specimens are shown in Table 1. These values were obtained from the literature[7] except for Young's modulus E_y, which was obtained from compression tests. The listed shear modulus G_{yz}, which is the most effective parameter on the shear deformations, is regarded as the average value for buna.

Results and discussion

Numerical stress distribution

Figure 6 shows the distributions of the shear stress τ_{yz} for λ of 0.1 mm in the LR plane. Compared with the LR specimens, the RL specimens have the approximately constant values of τ_{yz} over a wide range of the *z*-axis, and these values are nearly equal to $(\tau_{yz})_{\text{simple}}$, which denotes the shear stress for simple shear and is given by

$$\left(\tau_{yz}\right)_{\text{simple}} = G_{yz} \cdot \frac{\lambda}{c} \tag{1}$$

For the LR specimens, the shear stresses in the central part of the shear zone on which the strain gauge is mounted are also close to $(\tau_{yz})_{\text{simple}}$; the other stress components can be neglected there. Similar tendencies were observed for the shear stresses in the LT plane. Figure 7 shows the relation between the ratio of the average shear stress $(\tau_{yz})_{\text{av}}$ to $(\tau_{yz})_{\text{simple}}$ and the dimension *c*. The stress $(\tau_{yz})_{\text{av}}$ was defined as

$$\left(\tau_{yz}\right)_{\text{av}} = \frac{F_z}{lt} \tag{2}$$

where F_z is the summation of the nodal forces associated with the specified displacement λ. As mentioned above, the

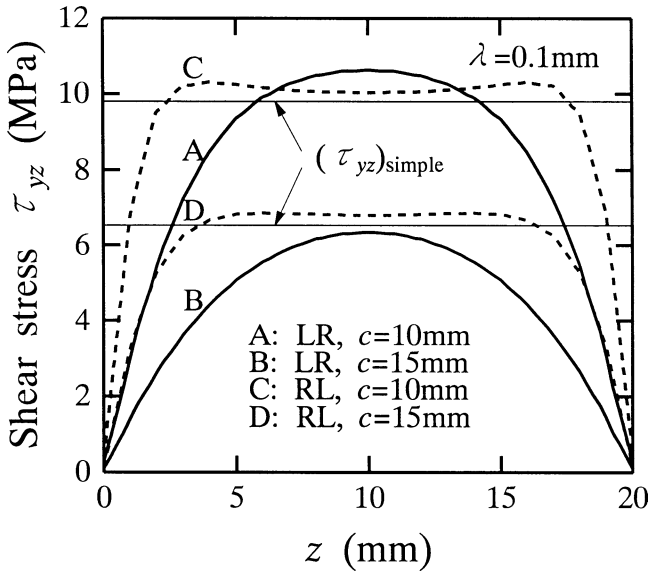

Fig. 6. Distributions of shear stress. Stress values were obtained at points $x = 0$, $y = c/2 + 1$ mm when the prescribed shear displacement λ is 0.1 mm

Table 1. Elastic constants used for FEM calculations

Parameter	Constant
Young's modulus (GPa)	
E_x	0.588
E_y	11.760
E_z	1.176
Shear modulus (GPa)	
G_{xy}	0.637
G_{yz}	0.980
G_{zx}	0.196
Poisson's ratio	
ν_{xy}	0.025
ν_{yz}	0.400
ν_{zx}	0.650

The data are for a specimen loaded in a direction perpendicular to the longitudinal direction (RL)
FEM, finite element method

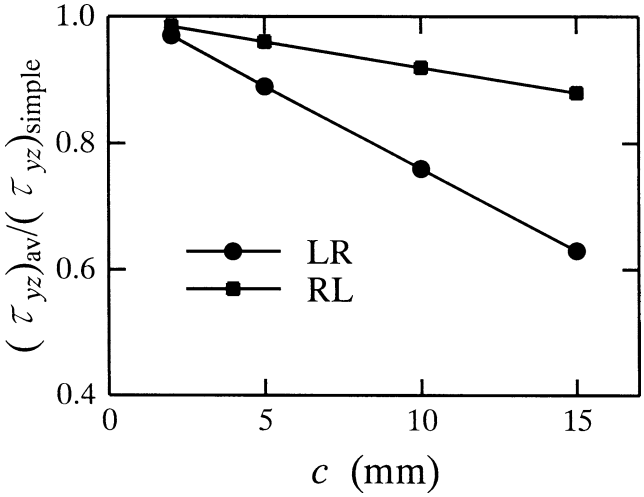

Fig. 7. Influence of shear zone size c on the degree of simple shear deformation

$(\tau_{yz})_{av}/(\tau_{yz})_{simple}$ ratio, which is unity for simple shear, decreases linearly with increasing c because of bending.

Apparent stress-strain relation

Figure 8 shows an example of apparent shear stress-strain relations obtained from the quasi-simple shear tests. The apparent shear stress $(\tau_{yz})_{exp}$ and the shear strain γ_{yz} were given by

$$(\tau_{yz})_{exp} = \frac{P}{2lt} \tag{3}$$

$$\gamma_{yz} = \frac{1}{2}\left[(\varepsilon_2 - \varepsilon_1) + (\varepsilon_3 - \varepsilon_4)\right] \tag{4}$$

where P is the applied load, and ε_1–ε_4 are the normal strains measured here. The apparent shear modulus $(G_{yz})_{exp}$ was determined from the initial linear segment of the apparent shear stress-shear strain diagram.

Correction of apparent shear modulus

The shear modulus must be evaluated with the actual shear stress $(\tau_{yz})_{ctr}$ in the central part of shear zones. Here we assumed that the apparent shear stress $(\tau_{yz})_{exp}$ is equivalent to the average shear stress $(\tau_{yz})_{av}$ obtained from the numerical results by FEM, and that $(\tau_{yz})_{ctr}$ is approximated by the calculated value. According to these assumptions, the apparent shear modulus $(G_{yz})_{exp}$ was corrected to estimate the proper value of the shear modulus $(G_{yz})_{est}$ as follows:

$$(G_{yz})_{est} = \alpha \cdot (G_{yz})_{exp} \tag{5}$$

$$\alpha = (\tau_{yz})_{ctr} / (\tau_{yz})_{av} \tag{6}$$

Because $(G_{yz})_{est}$ obtained from Eqs. (5) and (6) generally differs from the provisional value (Table 1) used for FEM calculations, an iterative approach was employed. Once the shear modulus $(G_{yz})_{est}$ is obtained, it is used to obtain a more proper value of α in the next step (Fig. 9). It was found that

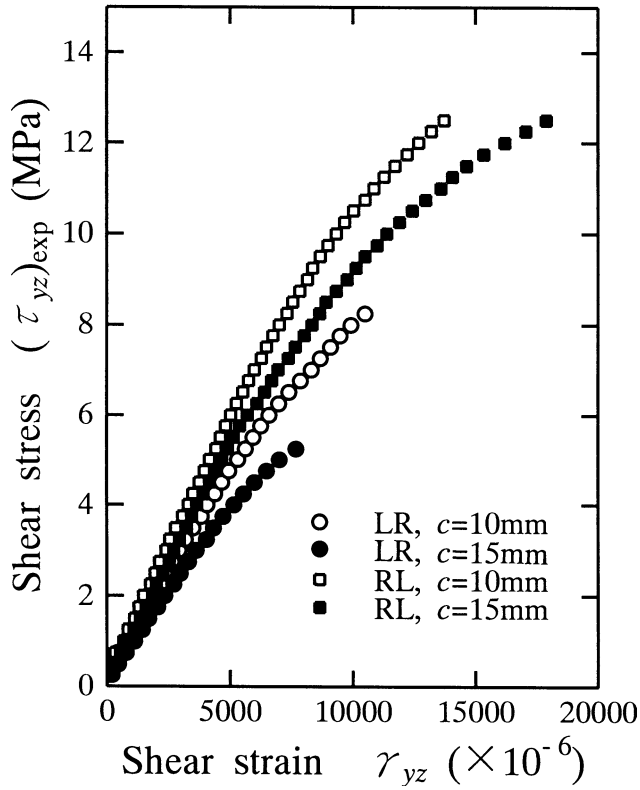

Fig. 8. Typical relations between apparent shear stress and shear strain

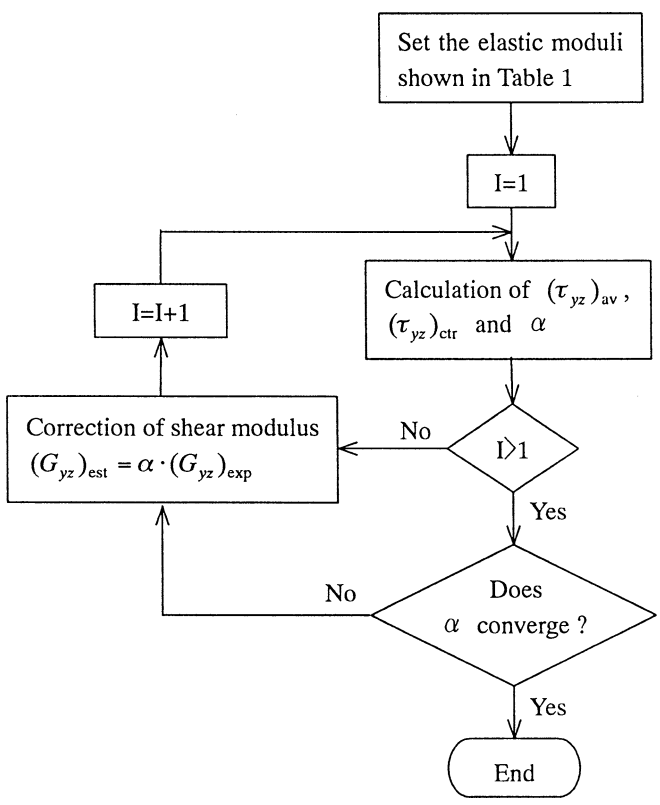

Fig. 9. Flow chart of determination technique of correction factor α_c

Table 2. Change of correction factor α_c with Young's modulus (c = 10 mm)

Specimen	Young's modulus (GPa)			Shear modulus (GPa)			
	E_x	E_y	E_z	G_{xy}	G_{yz}	G_{zx}	α_c
LR	0.588	0.882	11.76	0.196	0.98	0.637	1.52
		1.176					1.45
		1.47					1.41
RL	0.588	8.82	1.176	0.637	0.98	0.196	1.12
		11.76					1.10
		14.7					1.09
LT	1.176	0.392	11.76	0.196	0.637	0.98	1.55
		0.588					1.50
		0.784					1.46
TL	1.176	8.82	0.588	0.98	0.637	0.196	1.10
		11.76					1.08
		14.7					1.07

LR, loaded in a direction parallel to the longitudinal direction in the radial plane; LT, loaded in a direction parallel to the longitudinal direction in the tangential plane; TL, loaded in a direction perpendicular to the longitudinal direction in the tangential plane

Table 3. Apparent and corrected shear moduli for various test conditions

Specimen	c (mm)	$(G_{yz})_{exp}$ (GPa)	CV (%)	α_c	$(G_{yz})_{est}$ (GPa)
LR	10	0.89	6.7	1.45	1.29
	15	0.75	5.4	1.54	1.16
RL	10	1.10	3.6	1.10	1.21
	15	1.04	4.7	1.18	1.23
LT	10	0.63	3.5	1.50	0.95
	15	0.61	3.9	1.55	0.94
TL	10	0.84	5.3	1.08	0.91
	15	0.81	4.5	1.14	0.93

$(G_{yz})_{exp}$, apparent shear modulus; $(G_{yz})_{est}$, corrected shear modulus; CV, coefficient of variation

Table 4. Apparent and corrected shear moduli obtained from the four-point bending test

Specimen	G_{exp} (GPa)	CV (%)	α^N	α^F	G^N_{est} (GPa)	G^F_{est} (GPa)
RL	0.82	6.3	1.60	1.50	1.31	1.22
TL	0.59	3.9	1.56	1.50	0.92	0.89

Superscripts N and F indicate the author's method utilizing FEM simulation and Fonselius's method, respectively

the correction factor α rapidly reaches a constant value α_c after a few iterations. The effects of Young's modulus on α_c were also investigated numerically. The results (Table 2) showed that α_c does not vary much for ±25% (±33% for LT specimens) changes in Young's modulus used for FEM calculations, especially for RL or TL specimens.

The shear moduli corrected using α_c are shown in Table 3 together with the apparent shear moduli. It is clear that the corrected shear moduli are tolerably equal to each other irrespective of the test conditions, whereas this is not the case with the apparent shear moduli. Furthermore, it should be noted that $(G_{yz})_{exp}$ obtained for RL or TL specimens with c at 10 mm is closest to $(G_{yz})_{est}$. These results were compared with those obtained from the four-point bending tests employing the same method as we proposed here. They are close to each other, as shown in Table 4. Moreover, the shear modulus was determined by Fonselius's method[2] in which the correction factor is written as

$$\alpha = \frac{15 - 10\varsigma^2 + 3\varsigma^4}{10 - \frac{10}{3}\varsigma^2} \tag{7}$$

where ς equals $l_g/\sqrt{2h}$; l_g is the gauge length; and h is the depth of the cross section. Close agreement is demonstrated between the results obtained by the quasi-simple shear tests and those obtained by Fonselius's method (Table 4). From the above findings, it can be concluded that the newly proposed quasi-simple shear test is useful for estimating the shear moduli of wood. Thus, we believe that the correction factors approximated from Table 2, which are about 1.1 for RL or TL specimens and 1.5 for LR or LT specimens, are also used in the experiments conducted on other species.

Conclusions

A quasi-simple shear test was undertaken to ascertain the feasibility of measuring the shear moduli of wood. The shear moduli can be obtained appropriately, provided the correction factors α_c are determined from a FEM simulation. Approximate values of α_c were found to be about 1.1 and 1.5 for RL or TL specimens and LR or LT specimens, respectively. Further work is required to examine the validity of this measuring method using other species.

References

1. Yoshihara H, Ohta M (1993) Measurement of the shear moduli of wood by the torsion of a rectangular bar. Mokuzai Gakkaishi 39:993–997
2. Fonselius M (1997) Effect of size on the bending strength of laminated veneer lumber. Wood Sci Technol 31:399–413
3. Yoshihara H, Kubojima Y, Nagaoka K, Ohta M (1998) Measurement of the shear modulus of wood by static bending tests. J Wood Sci 44:15–20

4. Yoshihara H, Ohsaki H, Kubojima Y, Ohta M (1999) Applicability of the Iosipescu shear test on the measurement of the shear properties of wood. J Wood Sci 45:24–29
5. Miyauchi K (1984) Baushinger effect in planar shear deformation of sheet metals. In: Proceedings of the first international conference on technology of plasticity, Tokyo, p 623
6. Hirai T, Terasaki T, Murakami K (1997) Three-dimensional finite element method (in Japanese). Kyoritsu Shuppan, Tokyo
7. Ringyo Shikenjo (ed) (1982) Handbook to wood industry (in Japanese). Maruzen, Tokyo, p 130